Uni-Pier
Builders Grade
65 x 65 x 2mm SHS Post

TECHNICAL DRAWINGS

65x65x2mm SHS Post **Telescopic Head Without Ant Cap** (Base Plate Bolted To Concrete)	1
65x65x2mm SHS Post **Telescopic Head Without Ant Cap** (Base Plate Cast In Concrete)	2
65x65x2mm SHS Post **Telescopic Head With Ant Cap** (Base Plate Bolted To Concrete)	3
65x65x2mm SHS Post **Telescopic Head With Ant Cap** (Base Plate Cast In Concrete)	4
65x65x2mm SHS Post **Screw Top Head With Ant Cap** (Base Plate Bolted To Concrete)	5
65x65x2mm SHS Post **Screw Top Head With Ant Cap** (Base Plate Cast In Concrete)	6

<< BACK TO INDEX

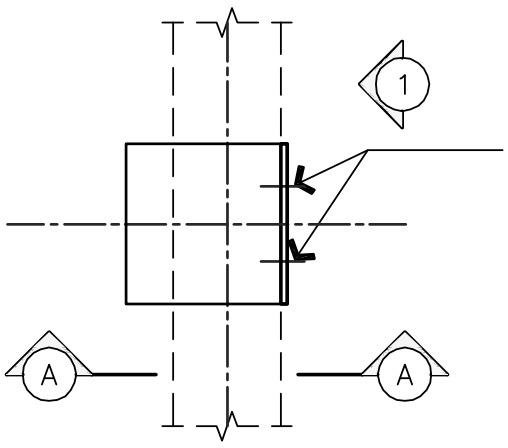

FIN PLATE TO BEARER FASTENERS
SCREWS FOR TIMBER BEARERS:
TYPE 17, 14–10 x 65 TO AS 3566 CLASS #4
SCREWS FOR STEEL BEARERS:
SELF DRILLING, SELF TAPPING SCREWS,
14–20 x 22 TO AS 3566 CLASS #4
BOLTS: M12 GALVANISED MILD STEEL

PLAN
SCALE 1:5

1 ELEVATION
SCALE 1:5

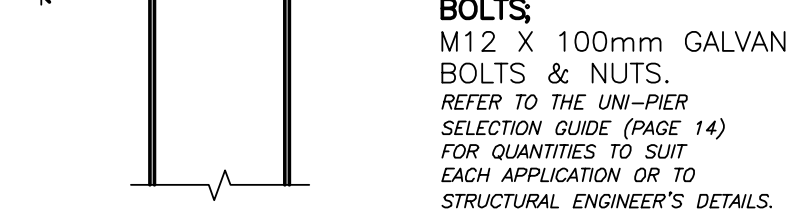

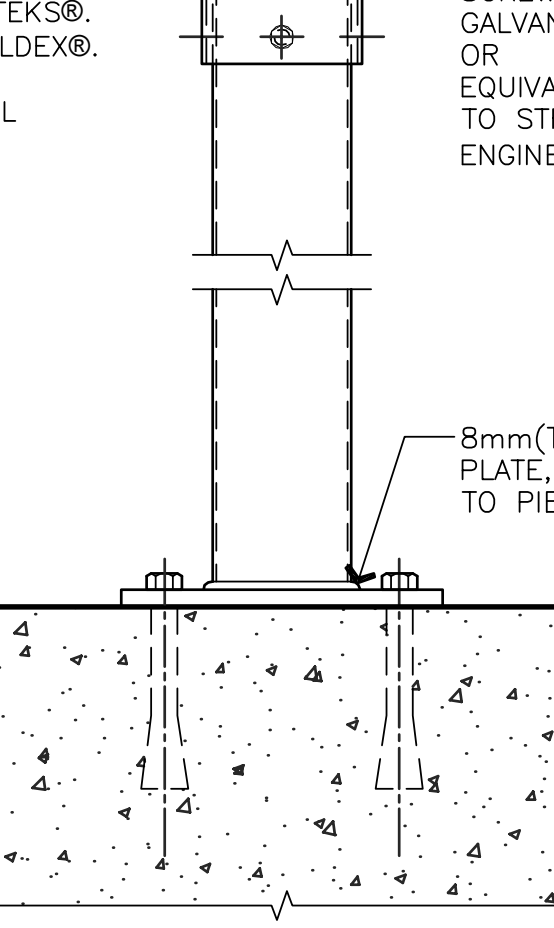

NOTE:
WIND REGIONS N1, N2 & N3
x2 OFF
M10 GALVANISED
MASONRY ANCHORS
OR
x2 OFF
12mm(DIA) x 125mm(L)
ANCHORS
OR
x2 OFF
"POWERS BLUE–TIP
SCREW–BOLT™"
GALVANISED ANCHORS
OR
EQUIVALENT
TO STRUCTURAL
ENGINEER'S DETAILS.

A SECTION
SCALE 1:5

25 mm 100 mm
0 50 mm

NOTE:
REFER TO TECHNICAL DOCUMENTATION ON
WEBSITE **www.unipier.com.au**
OR SEEK ADVICE FROM A QUALIFIED
STRUCTURAL ENGINEER

Uni-Pier™
TELESCOPIC POST & HEAD

Uni-Pier Australia Pty Ltd.
ACN 131 900 546

PO Box 6484 Silverwater NSW 1811
Phone: 1300 366 362
www.unipier.com.au

TITLE	BUILDERS GRADE 65x65x2 POST – TELESCOPIC HEAD WITHOUT ANT CAP (BASE PLATE BOLTED TO CONCRETE)			DWG.No. 01
DRAWN FGM	DATE 12/06/19	APPROVED KB	DATE 20/09/19	SCALE 1:5	REVISION: B

This drawing and all informations thereon is the property of Uni–Pier Australia Pty.Ltd. and shall be returned on demand. It is issued on the condition that except with our written permission it must not be reproduced, copied or communicated to any other party nor be used for any purpose other than that stated in particular enquiry, order or contract with which it is issued.

<< BACK TO INDEX

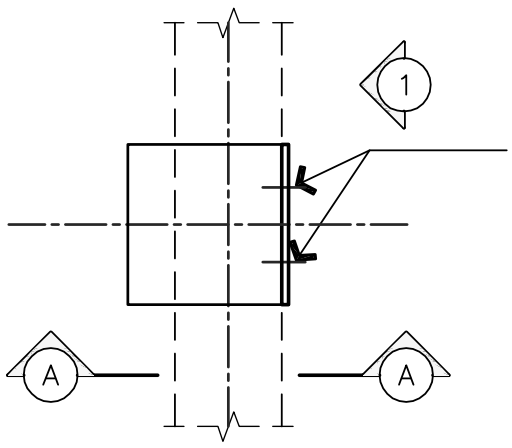

FIN PLATE TO BEARER FASTENERS
SCREWS FOR TIMBER BEARERS:
TYPE 17, 14–10 x 65 TO AS 3566 CLASS #4
SCREWS FOR STEEL BEARERS:
SELF DRILLING, SELF TAPPING SCREWS,
14–20 x 22 TO AS 3566 CLASS #4
BOLTS: M12 GALVANISED MILD STEEL

– PLAN
SCALE 1:5

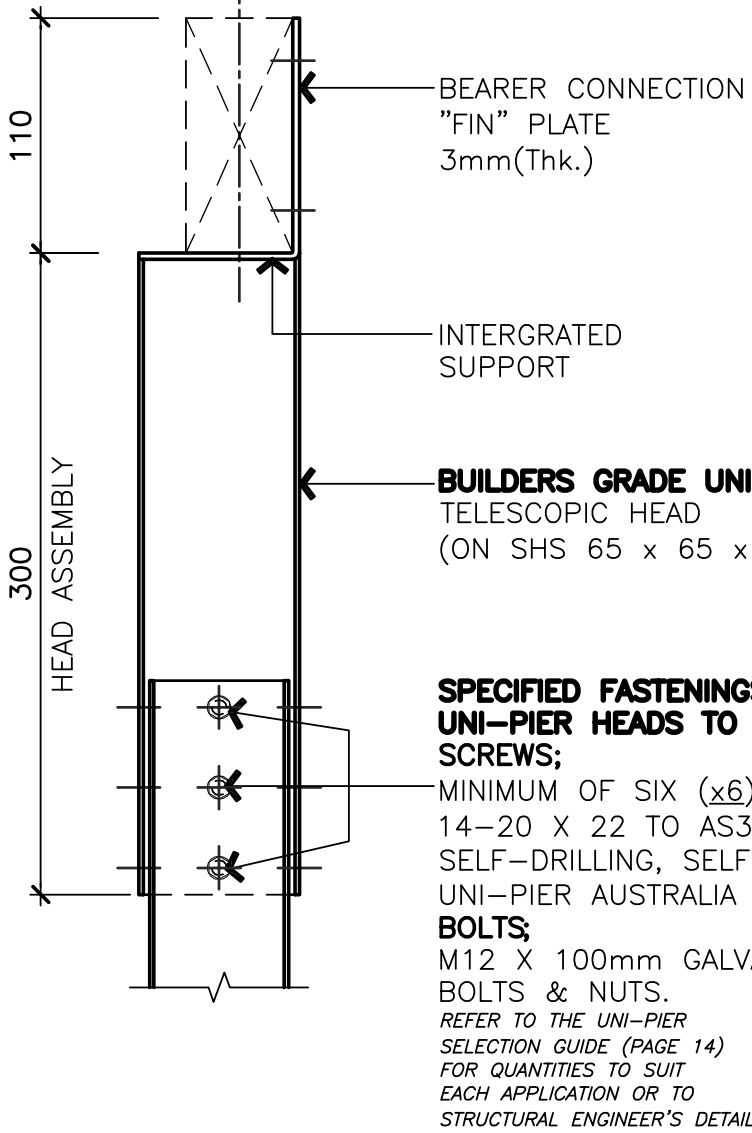

SPECIFIED FASTENINGS TO AFFIX UNI–PIER HEADS TO POSTS
SCREWS;
MINIMUM OF SIX (x6):
14–20 X 22 TO AS3566 CLASS #4
SELF–DRILLING, SELF TAPPING METAL TEKS®.
UNI–PIER AUSTRALIA RECOMMENDS BUILDEX®.
BOLTS;
M12 X 100mm GALVANISED MILD STEEL
BOLTS & NUTS.
REFER TO THE UNI–PIER SELECTION GUIDE (PAGE 14) FOR QUANTITIES TO SUIT EACH APPLICATION OR TO STRUCTURAL ENGINEER'S DETAILS.

A SECTION
SCALE 1:5

25 mm 100 mm
0 50 mm

1 ELEVATION
SCALE 1:5

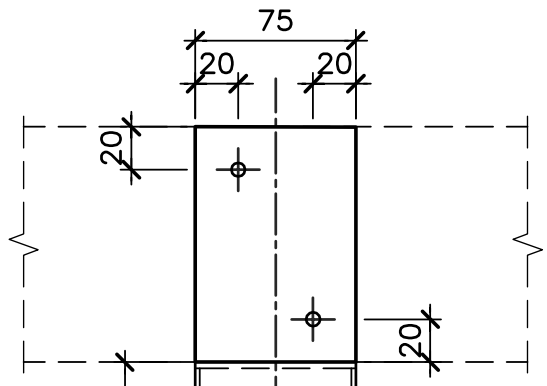

NOTE:
WIND REGIONS N1, N2 & N3
WHERE UNI–PIER IS TO BE CAST IN CONCRETE, FOOTING *MUST* BE DESIGNED BY A GEOTECHNICAL *OR* STRUCTURAL ENGINEER

PAINT POST MINIMUM OF *100mm ABOVE* & *100mm BELOW* CONCRETE, USE BITUMOUS *OR* EPOXY PAINT *OR* TO STRUCTURAL ENGINEER'S DETAILS

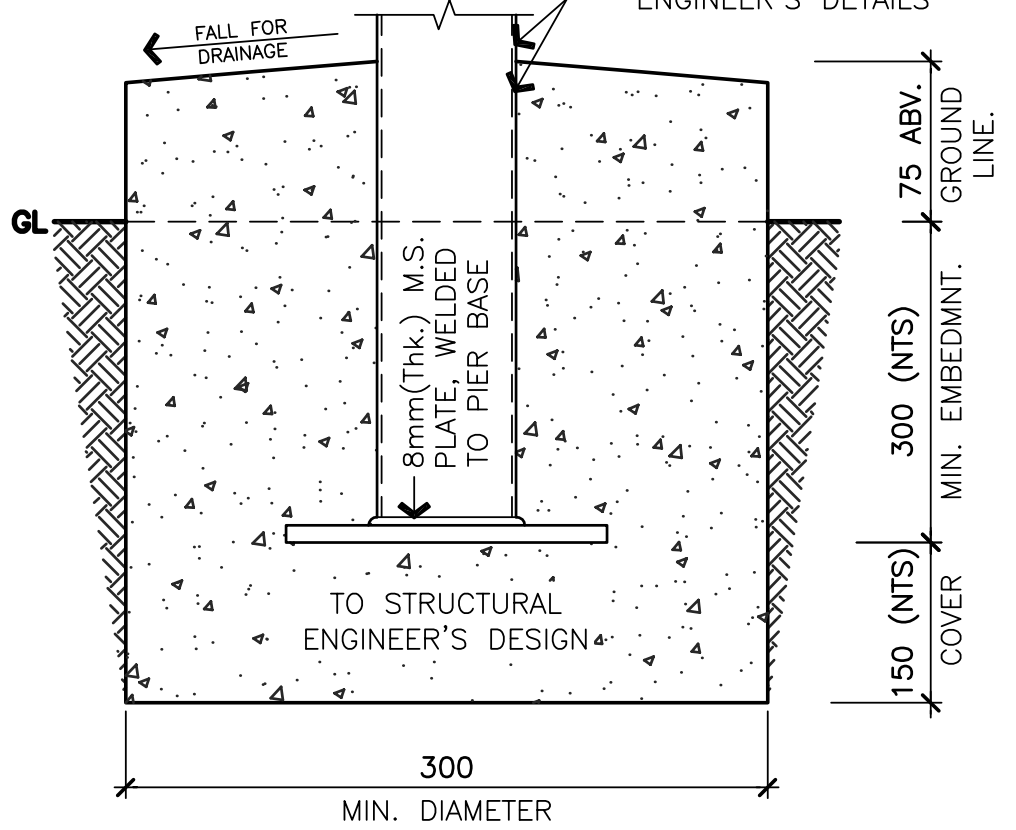

NOTE:
REFER TO TECHNICAL DOCUMENTATION ON WEBSITE **www.unipier.com.au**
OR SEEK ADVICE FROM A QUALIFIED STRUCTURAL ENGINEER

Uni-Pier™
TELESCOPIC POST & HEAD

Uni-Pier Australia Pty Ltd.
ACN 131 900 546

PO Box 6484 Silverwater NSW 1811
Phone: 1300 366 362
www.unipier.com.au

TITLE	BUILDERS GRADE 65x65x2 POST – TELESCOPIC HEAD WITHOUT ANT CAP (BASE PLATE CAST IN CONCRETE)			DWG.No. 02
DRAWN FGM	DATE 12/06/19	APPROVED KB	DATE 20/09/19	SCALE 1:5	REVISION: B

This drawing and all informations thereon is the property of Uni–Pier Australia Pty.Ltd. and shall be returned on demand. It is issued on the condition that except with our written permission it must not be reproduced, copied or communicated to any other party nor be used for any purpose other than that stated in particular enquiry, order or contract with which it is issued.

<< BACK TO INDEX

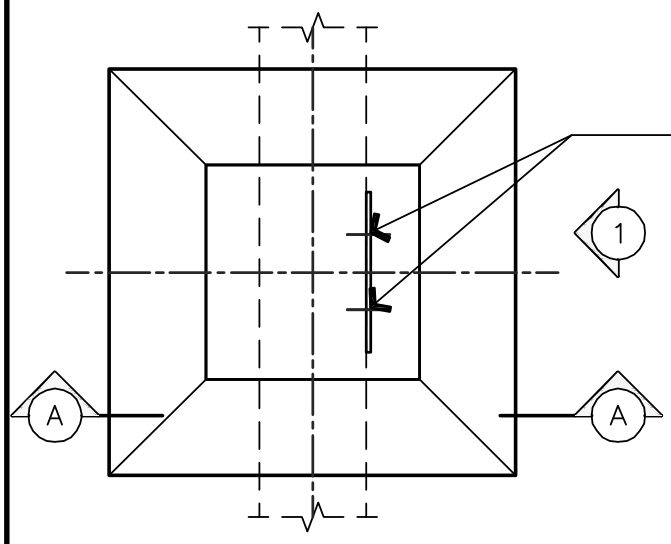

FIN PLATE TO BEARER FASTENERS
SCREWS FOR TIMBER BEARERS:
TYPE 17, 14–10 x 65 TO AS 3566 CLASS #4
SCREWS FOR STEEL BEARERS:
SELF DRILLING, SELF TAPPING SCREWS,
14–20 x 22 TO AS 3566 CLASS #4
BOLTS: M12 GALVANISED MILD STEEL

PLAN
SCALE 1:5

1 ELEVATION
SCALE 1:5

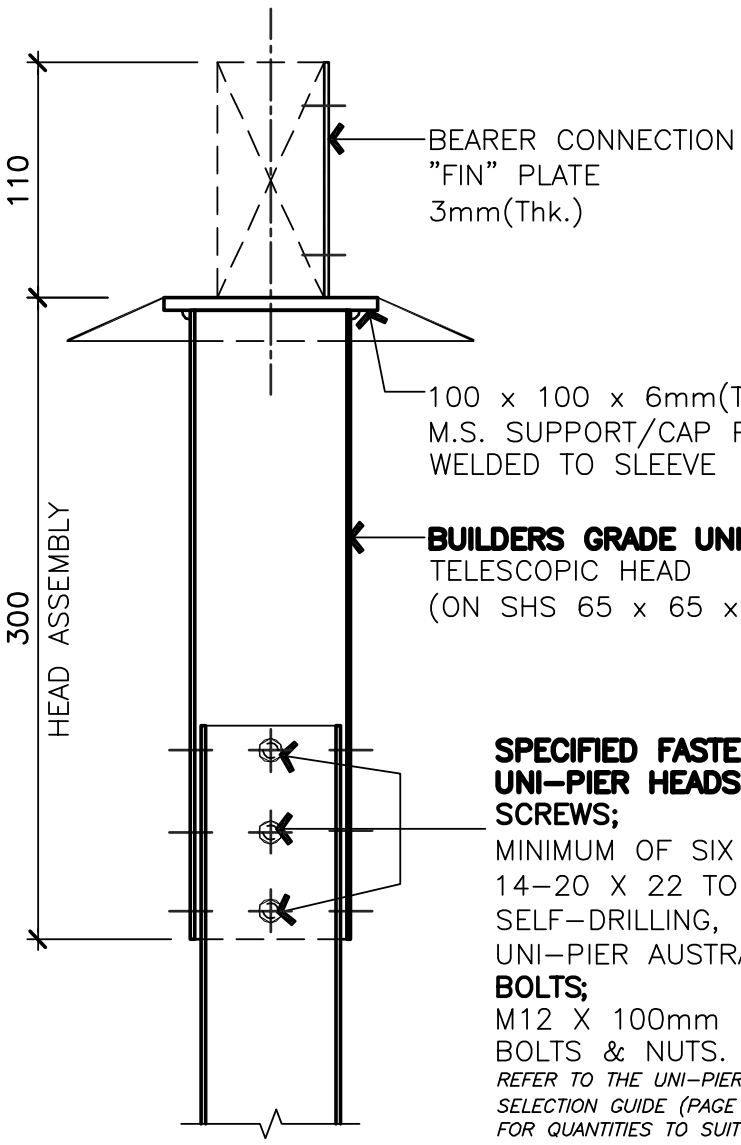

BEARER CONNECTION
"FIN" PLATE
3mm(Thk.)

100 x 100 x 6mm(Thk.)
M.S. SUPPORT/CAP PLATE,
WELDED TO SLEEVE

BUILDERS GRADE UNI–PIER
TELESCOPIC HEAD
(ON SHS 65 x 65 x 2mm(Thk.) PIERS)

SPECIFIED FASTENINGS TO AFFIX UNI–PIER HEADS TO POSTS
SCREWS;
MINIMUM OF SIX (x6):
14–20 X 22 TO AS3566 CLASS #4
SELF–DRILLING, SELF TAPPING METAL TEKS®.
UNI–PIER AUSTRALIA RECOMMENDS BUILDEX®.
BOLTS;
M12 X 100mm GALVANISED MILD STEEL
BOLTS & NUTS.
REFER TO THE UNI–PIER SELECTION GUIDE (PAGE 14) FOR QUANTITIES TO SUIT EACH APPLICATION OR TO STRUCTURAL ENGINEER'S DETAILS.

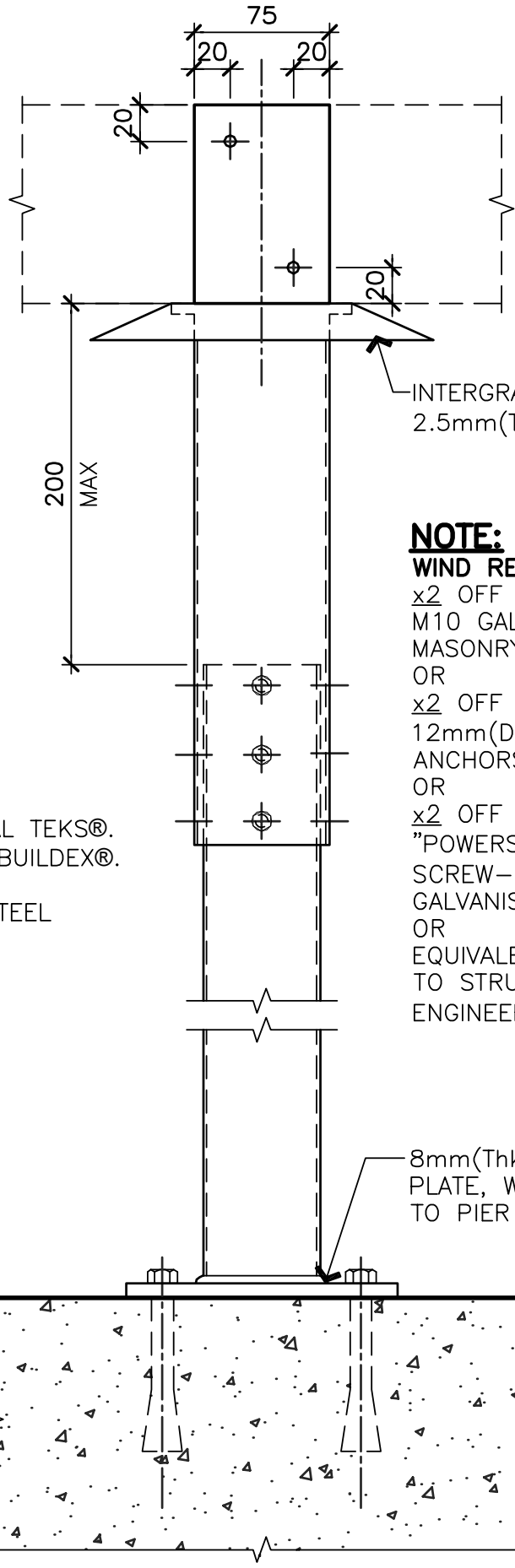

INTERGRATED ANTCAP
2.5mm(Thk.)

NOTE:
WIND REGIONS N1, N2 & N3
x2 OFF
M10 GALVANISED
MASONRY ANCHORS
OR
x2 OFF
12mm(DIA) x 125mm(L)
ANCHORS
OR
x2 OFF
"POWERS BLUE–TIP
SCREW–BOLT™"
GALVANISED ANCHORS
OR
EQUIVALENT
TO STRUCTURAL
ENGINEER'S DETAILS.

8mm(Thk.) M.S.
PLATE, WELDED
TO PIER BASE

A SECTION
SCALE 1:5

25 mm 100 mm
0 50 mm

NOTE:
REFER TO TECHNICAL DOCUMENTATION ON WEBSITE **www.unipier.com.au**
OR SEEK ADVICE FROM A QUALIFIED STRUCTURAL ENGINEER

Uni-Pier™
TELESCOPIC POST & HEAD

Uni-Pier Australia Pty Ltd.
ACN 131 900 546
PO Box 6484 Silverwater NSW 1811
Phone: 1300 366 362
www.unipier.com.au

TITLE	BUILDERS GRADE 65x65x2 POST – TELESCOPIC HEAD WITH ANT CAP (BASE PLATE BOLTED TO CONCRETE)				DWG.No. 03
DRAWN FGM	DATE 12/06/19	APPROVED KB	DATE 20/09/19	SCALE 1:5	REVISION: B

This drawing and all informations thereon is the property of Uni–Pier Australia Pty.Ltd. and shall be returned on demand. It is issued on the condition that except with our written permission it must not be reproduced, copied or communicated to any other party nor be used for any purpose other than that stated in particular enquiry, order or contract with which it is issued.

<< BACK TO INDEX

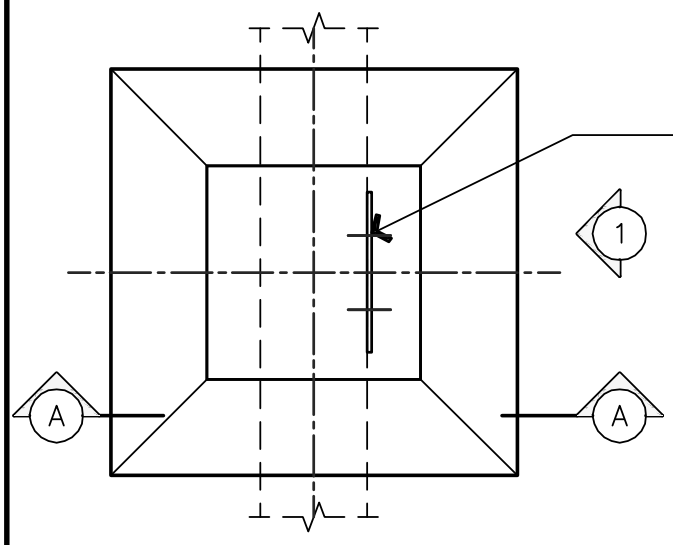

FIN PLATE TO BEARER FASTENERS
SCREWS FOR TIMBER BEARERS:
TYPE 17, 14–10 x 65 TO AS 3566 CLASS #4
SCREWS FOR STEEL BEARERS:
SELF DRILLING, SELF TAPPING SCREWS,
14–20 x 22 TO AS 3566 CLASS #4
BOLTS: M12 GALVANISED MILD STEEL

PLAN
SCALE 1:5

1 ELEVATION
SCALE 1:5

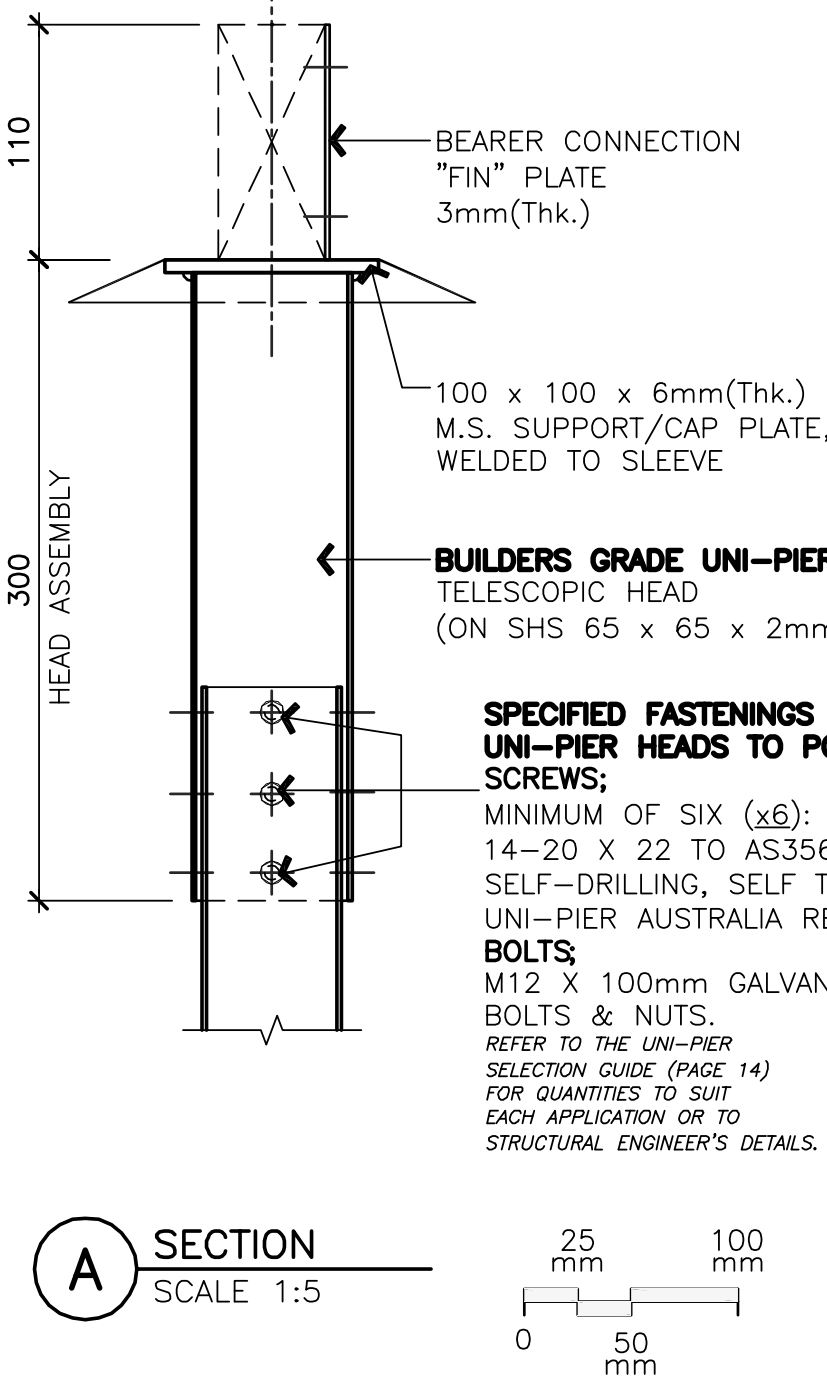

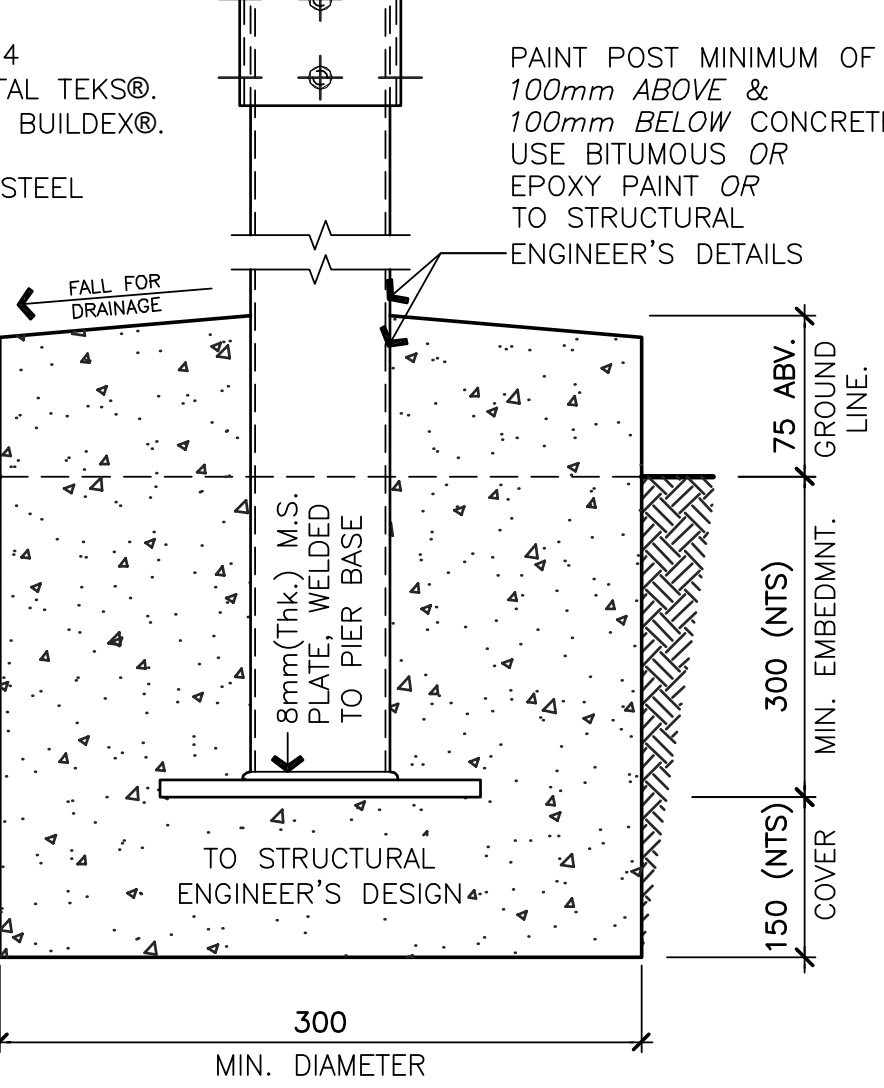

A SECTION
SCALE 1:5

25 mm 100 mm
0 50 mm

NOTE:
REFER TO TECHNICAL DOCUMENTATION ON
WEBSITE **www.unipier.com.au**
OR SEEK ADVICE FROM A QUALIFIED
STRUCTURAL ENGINEER

Uni-Pier™
TELESCOPIC POST & HEAD

Uni-Pier Australia Pty Ltd.
ACN 131 900 546
PO Box 6484 Silverwater NSW 1811
Phone: 1300 366 362
www.unipier.com.au

TITLE	BUILDERS GRADE 65x65x2 POST – TELESCOPIC HEAD WITH ANT CAP (BASE PLATE CAST IN CONCRETE)			DWG.No. 04
DRAWN FGM	DATE 12/06/19	APPROVED KB	DATE 20/09/19	SCALE 1:5	REVISION: B

This drawing and all informations thereon is the property of Uni–Pier Australia Pty.Ltd. and shall be returned on demand. It is issued on the condition that except with our written permission it must not be reproduced, copied or communicated to any other party nor be used for any purpose other than that stated in particular enquiry, order or contract with which it is issued.

<< BACK TO INDEX

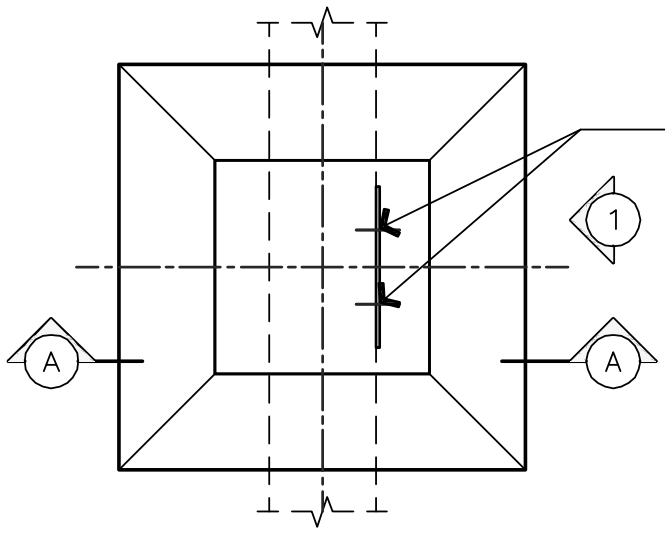

FIN PLATE TO BEARER FASTENERS
SCREWS FOR TIMBER BEARERS:
TYPE 17, 14–10 x 65 TO AS 3566 CLASS #4
SCREWS FOR STEEL BEARERS:
SELF DRILLING, SELF TAPPING SCREWS,
14–20 x 22 TO AS 3566 CLASS #4
BOLTS: M12 GALVANISED MILD STEEL

— PLAN
SCALE 1:5

1 ELEVATION
SCALE 1:5

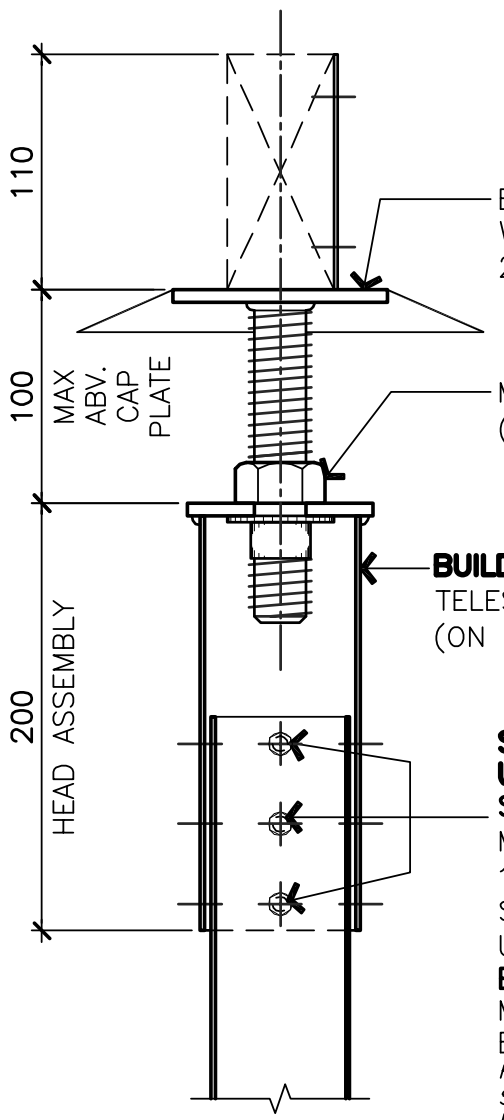

BEARER SUPPORT PLATE
WITH INTERGRATED
2.5mm(Thk.) ANTCAP

M24 MACHINED NUT
(WITH CIRCLIP WASHER BELOW)

BUILDERS GRADE UNI–PIER
TELESCOPIC/ADJ. HEAD
(ON SHS 65 x 65 x 2mm(Thk.) PIERS)

SPECIFIED FASTENINGS TO AFFIX UNI–PIER HEADS TO POSTS
SCREWS;
MINIMUM OF SIX (x6):
14–20 X 22 TO AS3566 CLASS #4
SELF–DRILLING, SELF TAPPING METAL TEKS®.
UNI–PIER AUSTRALIA RECOMMENDS BUILDEX®.
BOLTS;
M12 X 100mm GALVANISED MILD STEEL
BOLTS & NUTS.
REFER TO THE UNI–PIER SELECTION GUIDE (PAGE 14) FOR QUANTITIES TO SUIT EACH APPLICATION OR TO STRUCTURAL ENGINEER'S DETAILS.

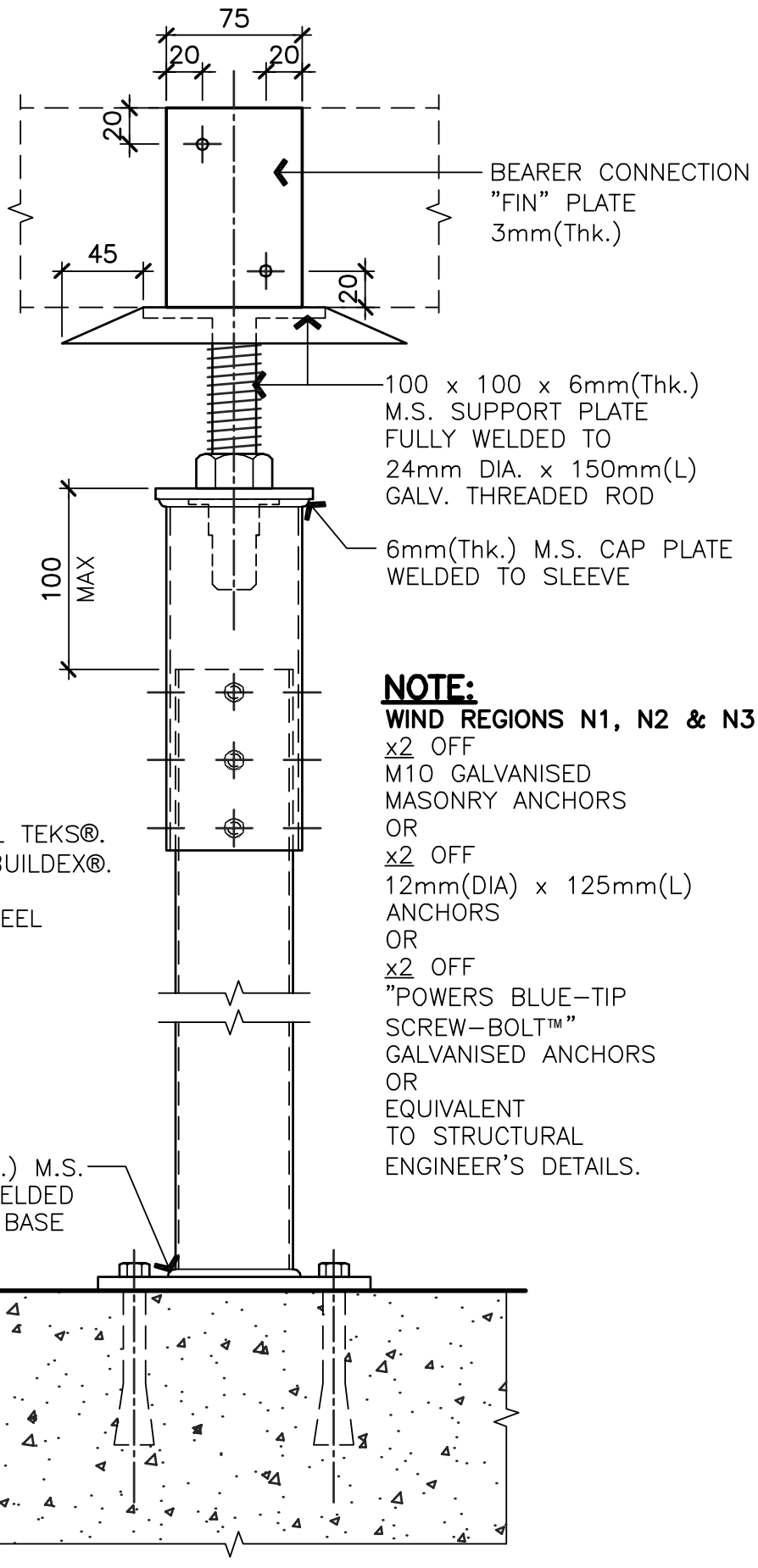

BEARER CONNECTION
"FIN" PLATE
3mm(Thk.)

100 x 100 x 6mm(Thk.)
M.S. SUPPORT PLATE
FULLY WELDED TO
24mm DIA. x 150mm(L)
GALV. THREADED ROD

6mm(Thk.) M.S. CAP PLATE
WELDED TO SLEEVE

NOTE:
WIND REGIONS N1, N2 & N3
x2 OFF
M10 GALVANISED
MASONRY ANCHORS
OR
x2 OFF
12mm(DIA) x 125mm(L)
ANCHORS
OR
x2 OFF
"POWERS BLUE–TIP
SCREW–BOLT™"
GALVANISED ANCHORS
OR
EQUIVALENT
TO STRUCTURAL
ENGINEER'S DETAILS.

A SECTION
SCALE 1:5

25 mm 100 mm
0 50 mm

8mm(Thk.) M.S.
PLATE, WELDED
TO PIER BASE

GL

NOTE:
REFER TO TECHNICAL DOCUMENTATION ON WEBSITE **www.unipier.com.au**
OR SEEK ADVICE FROM A QUALIFIED STRUCTURAL ENGINEER

Uni-Pier™ STH
ADJUSTABLE SCREW TOP HEAD

Uni-Pier Australia Pty Ltd.
ACN 131 900 546
PO Box 6484 Silverwater NSW 1811
Phone: 1300 366 362
www.unipier.com.au

TITLE	BUILDERS GRADE 65x65x2 POST – SCREW TOP HEAD WITH ANT CAP (BASE PLATE BOLTED TO CONCRETE)			DWG.No. 05
DRAWN FGM	DATE 12/06/19	APPROVED KB	DATE 20/09/19	SCALE 1:5	REVISION: B

This drawing and all informations thereon is the property of Uni–Pier Australia Pty.Ltd. and shall be returned on demand. It is issued on the condition that except with our written permission it must not be reproduced, copied or communicated to any other party nor be used for any purpose other than that stated in particular enquiry, order or contract with which it is issued.

<< BACK TO INDEX

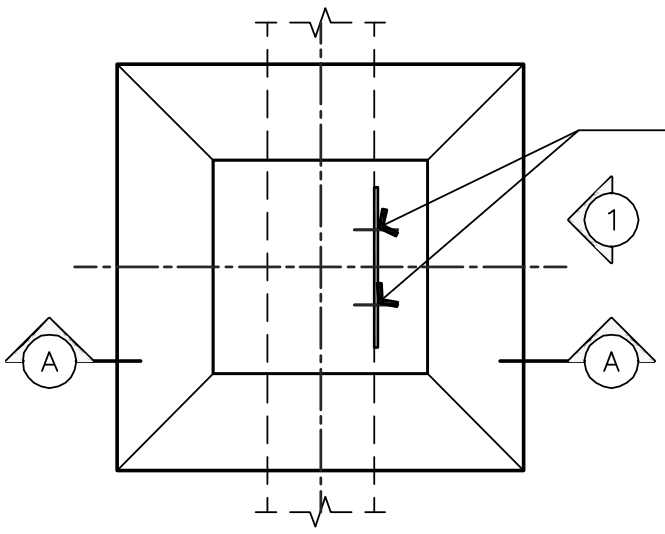

FIN PLATE TO BEARER FASTENERS
SCREWS FOR TIMBER BEARERS:
TYPE 17, 14–10 x 65 TO AS 3566 CLASS #4
SCREWS FOR STEEL BEARERS:
SELF DRILLING, SELF TAPPING SCREWS,
14–20 x 22 TO AS 3566 CLASS #4
BOLTS: M12 GALVANISED MILD STEEL

PLAN
SCALE 1:5

1 ELEVATION
SCALE 1:5

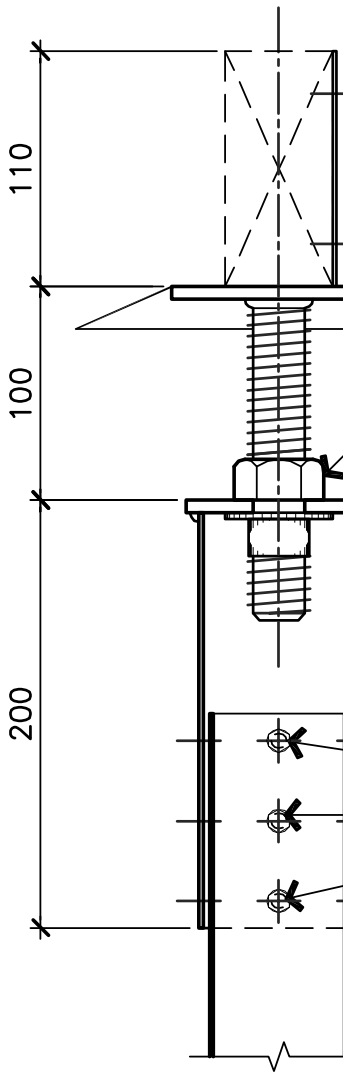

BEARER SUPPORT PLATE
WITH INTERGRATED
2.5mm(Thk.) ANTCAP

M24 MACHINED NUT
(WITH CIRCLIP WASHER BELOW)

6mm(Thk.) M.S. CAP PLATE
WELDED TO SLEEVE

BUILDERS GRADE UNI–PIER
TELESCOPIC/ADJ. HEAD
(ON SHS 65 x 65 x 2mm(Thk.) PIERS)

SPECIFIED FASTENINGS TO AFFIX UNI–PIER HEADS TO POSTS
SCREWS;
MINIMUM OF SIX (x6):
14–20 X 22 TO AS3566 CLASS #4
SELF–DRILLING, SELF TAPPING METAL TEKS®.
UNI–PIER AUSTRALIA RECOMMENDS BUILDEX®.
BOLTS;
M12 X 100mm GALVANISED MILD STEEL
BOLTS & NUTS.
REFER TO THE UNI–PIER SELECTION GUIDE (PAGE 14) FOR QUANTITIES TO SUIT EACH APPLICATION OR TO STRUCTURAL ENGINEER'S DETAILS.

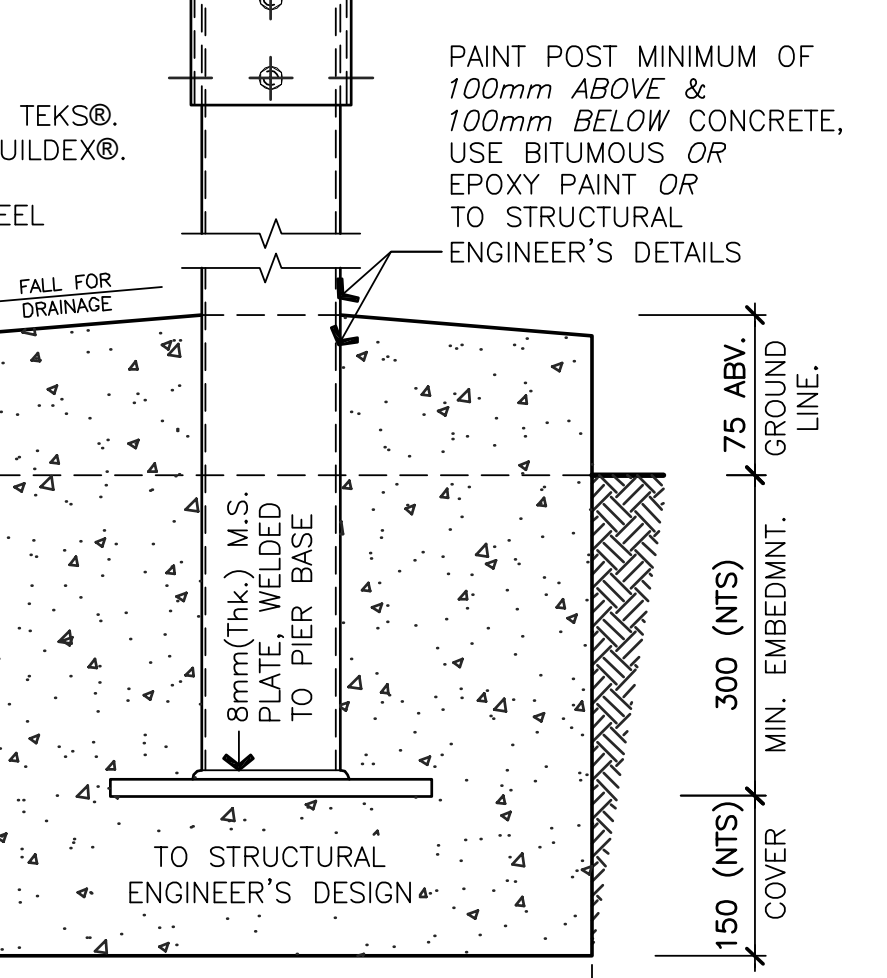

BEARER CONNECTION
"FIN" PLATE
3mm(Thk.)

100 x 100 x 6mm(Thk.)
M.S. SUPPORT PLATE
FULLY WELDED TO
24mm DIA. x 150mm(L)
GALV. THREADED ROD

NOTE:
WIND REGIONS N1, N2 & N3
WHERE UNI–PIER IS TO BE
CAST IN CONCRETE,
FOOTING *MUST* BE DESIGNED
BY A GEOTECHNICAL
OR
STRUCTURAL ENGINEER

PAINT POST MINIMUM OF
100mm ABOVE &
100mm BELOW CONCRETE,
USE BITUMOUS *OR*
EPOXY PAINT *OR*
TO STRUCTURAL
ENGINEER'S DETAILS

A SECTION
SECTION

25 mm 100 mm
0 50 mm

NOTE:
REFER TO TECHNICAL DOCUMENTATION ON
WEBSITE **www.unipier.com.au**
OR SEEK ADVICE FROM A QUALIFIED
STRUCTURAL ENGINEER

Uni-Pier™ STH
ADJUSTABLE SCREW TOP HEAD

Uni-Pier Australia Pty Ltd.
ACN 131 900 546
PO Box 6484 Silverwater NSW 1811
Phone: 1300 366 362
www.unipier.com.au

TITLE	BUILDERS GRADE 65x65x2 POST – SCREW TOP HEAD WITH ANT CAP (BASE PLATE CAST IN CONCRETE)				DWG.No. 06
DRAWN FGM	DATE 12/06/19	APPROVED KB	DATE 20/09/19	SCALE 1:5	REVISION: B

This drawing and all informations thereon is the property of Uni–Pier Australia Pty.Ltd. and shall be returned on demand. It is issued on the condition that except with our written permission it must not be reproduced, copied or communicated to any other party nor be used for any purpose other than that stated in particular enquiry, order or contract with which it is issued.